Mechantronics And Instrumentation Lab

Automated MIG Welding Cleaner

Submitted by:
Anshul Gaharwal (230003007)
Bogi Kartheek Sashank (230003017)
Gangyada Yochana Mythri (230003023)
Karri Jothirmai (230003032)
Vangalapudi Abhitha (230003081)

Course Instructor: Prof. I.A. Palani

2. Abstract

This project presents the design and development of an automated MIG torch cleaning system that utilizes a combination of pneumatic, electrical, and mechanical components to simplify the maintenance of MIG welding torches. The system employs a pneumatic cylinder to raise and lower a disc, a solenoid-actuated air blow for dust removal, and brush motor and pump for spraying anti-spatter liquid for cleaning. A servo and stepper motor arrangement facilitates controlled rotation and wire trimming of the torch. The project focuses on achieving efficient cleaning cycles with minimal human intervention, ensuring consistent weld quality and extended torch life.

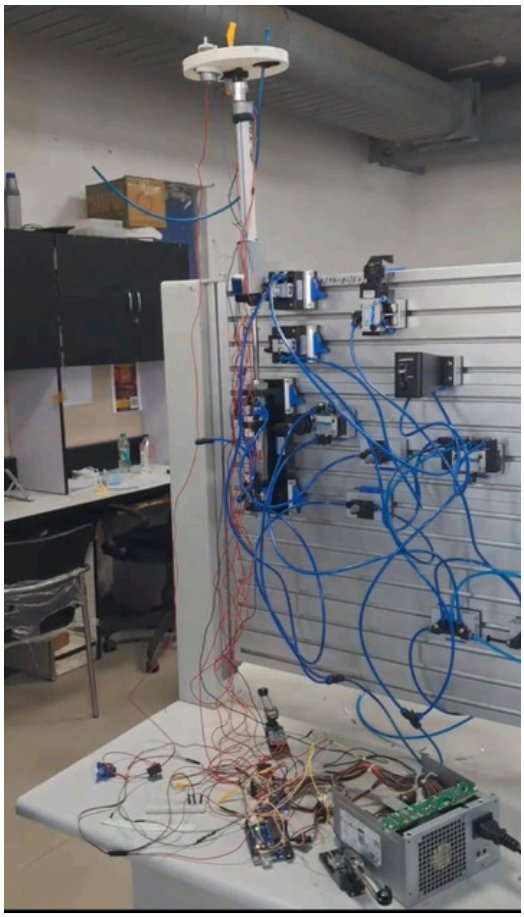

Figure 2a: Setup

3. Table of Contents

1. **Title Page**

2**. Abstract**

3**. Table of Contents**

4**. Introduction**

4.1 Background on MIG Welding and Torch Maintenance Systems
4.2 Motivation for a DIY, Cost-Effective Torch Cleaner

5**. Problem Statement**

5.1 Gaps in Existing MIG Torch Cleaning Systems
5.2 Overview of the Proposed Solution
5.3 Advantages of the Proposed Approach

6. **System Design & Implementation**

6.1 Mechanical Design
6.2 Electrical & Control Hardware
6.3 Pneumatic Setup

7. Limitations & Future Work

7.1 Current Limitations
7.2 Planned Upgrades

8. Conclusion

4. Introduction

4.1 Background on MIG Welding and Torch Maintenance Systems

Metal Inert Gas (MIG) welding is one of the most widely used arc welding processes in manufacturing industries due to its versatility, high deposition rate, and ease of automation. However, during continuous welding, spatter and carbon deposits accumulate on the torch nozzle and contact tip. These impurities affect shielding gas flow, arc stability, and overall weld quality.

Traditionally, cleaning of MIG torches is performed manually using brushes or sprays between weld cycles. While simple, manual cleaning is inconsistent, time-consuming, and exposes operators to heat and metal fumes. To overcome these drawbacks, automated torch cleaning systems are employed in robotic welding cells. Such systems typically use pneumatic or motor-driven brushes, air blowers, and wire cutters to clean and maintain the torch automatically after each welding cycle.

Although effective, commercial MIG torch cleaning systems are often expensive, bulky, and designed for industrial robotic setups, making them unsuitable for smaller workshops or prototype environments.

4.2 Motivation for a DIY, Cost-Effective Torch Cleaner

Despite their proven efficiency, automated MIG torch cleaners are not easily accessible to educational institutions, small-scale industries, or research labs due to high cost and complex installation requirements. Conventional systems integrate electrically actuated pneumatics, programmable logic controllers (PLCs), and specialized hardware — all of which increase overall expense.

This project aims to develop a low-cost, Arduino-controlled prototype of an automated MIG torch cleaner using mechanical pneumatics and simple electronic control. The system demonstrates the feasibility of performing core cleaning operations — brushing, air blowing, anti-spatter spraying and wire cutting — through readily available components such as solenoid valves, DC motors, servos, and stepper motors.

A pneumatic cylinder provides vertical motion for a disc which has all the components involved in the entire cleaning process (Z-axis), while a stepper motor ensures 120° rotational movement for accessibility of each component. The servo motor is used to cut the wire before cleaning as there will always be a part of wire that can’t be used in the next operation. The

cleaning brush and air blow are currently operated manually due to unavailable drivers and actuators, but the system design supports future automation upgrades.

Key benefits of this approach include:

- **Affordability & Accessibility**: Uses low-cost, easily available components (Arduino, pneumatic valves, DC motors, servos) to replicate industrial cleaning functions at a fraction of the cost.
- **Simplicity & Compact Design**: The mechanical pneumatic approach minimizes complexity, making the setup suitable for educational and prototype applications with limited resources.
- **Modularity & Scalability**: Each subsystem (brush, air, rotation, wire cutter) is modular, enabling easy future upgrades such as electrically actuated pneumatics and sensor feedback systems.
- **Educational & Research Value**: The project provides hands-on learning in pneumatics, automation, control logic, and Arduino programming — bridging theoretical understanding with real-world application.

By utilizing a combination of mechanical pneumatics and microcontroller-based logic, this project presents a cost-effective and educational prototype that demonstrates the working principles of an automated MIG torch cleaner, serving as a foundation for future industrial-grade development.

5. Problem Statement

5.1 Gaps in Existing MIG Torch Cleaning Systems

Commercial MIG torch cleaning systems are designed primarily for automated robotic welding setups in large-scale industries. While highly effective, these systems present several challenges that limit their use in small-scale or educational environments:

- **High Cost**: Industrial torch cleaners typically integrate PLCs, electrically actuated pneumatic valves, high-power motors, and sensors — making them prohibitively expensive for small workshops and research prototypes.
- **Complex Integration:** Commercial systems require specialized electrical interfaces, PLC programming knowledge, and dedicated mounting arrangements, which are not compatible with low-cost or standalone welding setups.
- **Maintenance Difficulty:** The use of proprietary hardware and electrical components complicates servicing and part replacement, especially in laboratory or student-built projects.
- **Lack of Flexibility for Experimentation:** Commercial designs are optimized for industrial cycle times and may not allow modifications or experimentation with timing, cleaning duration, or alternative cleaning tools.

These limitations emphasize the need for a simplified, cost-effective, and modular torch cleaner that can perform the core functions — cleaning, air blowing,

and wire cutting — without complex electronics or industrial infrastructure.

5.2 Overview of the Proposed Solution

This project proposes a **mechanical–pneumatic MIG torch cleaning prototype** that performs sequential cleaning operations using easily available components and an **Arduino Uno** controller. The system is designed to:

1. Hold and align the MIG welding torch horizontally using a fixed ring and slot system.
2. Raise and lower the cleaning disc via a **double acting pneumatic cylinder**.
3. Rotate the cleaning disc **by 120°** using a **stepper motor**, allowing three cleaning stations to align sequentially:
   - **Brush slot:** Equipped with a rotating brush for cleaning spatter and debris.
   - **Spray slot:** Contains an anti-spatter spray bottle activated for a preset duration (~5 seconds).
   - **Air blow slot:** Connects to the pneumatic line to remove residual dust.
4. Perform **wire cutting** using a servo-actuated dual-blade system as soon as the system is powered.

Due to time constraints and hardware limitations, the current prototype uses:

- **Mechanical actuation** for air blow and spray operations via manual switches.

- **A pneumatic timer (10s)** for controlling Z-axis up–down motion instead of an electrical solenoid control.
- Continuous operation of the **brush motor** (as motor drivers are malfunctioning).

However, the system's modular design supports easy future integration of **electrically actuated pneumatics and sensor-based automation** for a fully automated version.

5.3 Advantages of the Proposed Approach

The proposed system bridges the gap between expensive industrial solutions and manual cleaning methods by combining **mechanical simplicity** with **programmable control**.

Key advantages include:

- **Cost Efficiency**: Developed at an estimated budget of under ₹1500, using easily available parts and workshop fabrication.
- **Ease of Implementation**: Uses Arduino-based control logic and standard pneumatic components, making it suitable for laboratory fabrication and educational demonstration.
- **Expandability**: Can be upgraded with motor drivers, automated valves, and load sensors for fully automatic operation in future iterations.
- **Practical Application**: Serves as a working prototype demonstrating core cleaning operations — brushing, spraying, blowing, and wire cutting — in a simplified, modular setup.

6. System Design & Implementation

6.1 Mechanical Design

Overview

The mechanical design centers on a horizontal disc that holds three cleaning stations (brush / spray / air-blow) arranged at 120° intervals, mounted inside a supporting ring. The disc indexes in 120° steps using a stepper motor, and the entire disc assembly is moved vertically (Z motion) by a compact pneumatic cylinder. These are done using 3d printing, we had an initial plan of making a torch holder too but later realized that the torch will not be able to hold the weight of the original torch so for prototyping we do not need to print it.

6.2 Electrical & Control Hardware

The circuit begins operation when the roller-lever switch is pressed, which pulls Arduino pin 2 LOW through the internal pull-up configuration. This prevents accidental triggering during power-up. The servo motor is powered from the 5V DC power supply, with its control signal received from Arduino pin 9, allowing it to perform the required 120-degree rotation and return. The 28BYJ-48 stepper motor is driven through the ULN2003 driver board, which receives control inputs from Arduino pins 8, 7, 6, and 5 and draws power from the same DC power supply.

The water pump, which requires more current than an Arduino pin can provide, is connected through a motor-driver module such as the L298N, L293D, or BTN7960. The motor driver powers the pump and is controlled by the Arduino through pin 10. All components share a common ground with the DC power supply, ensuring stable operation and proper reference for all signals.

Figure 6a: Electrical Circuit Diagram

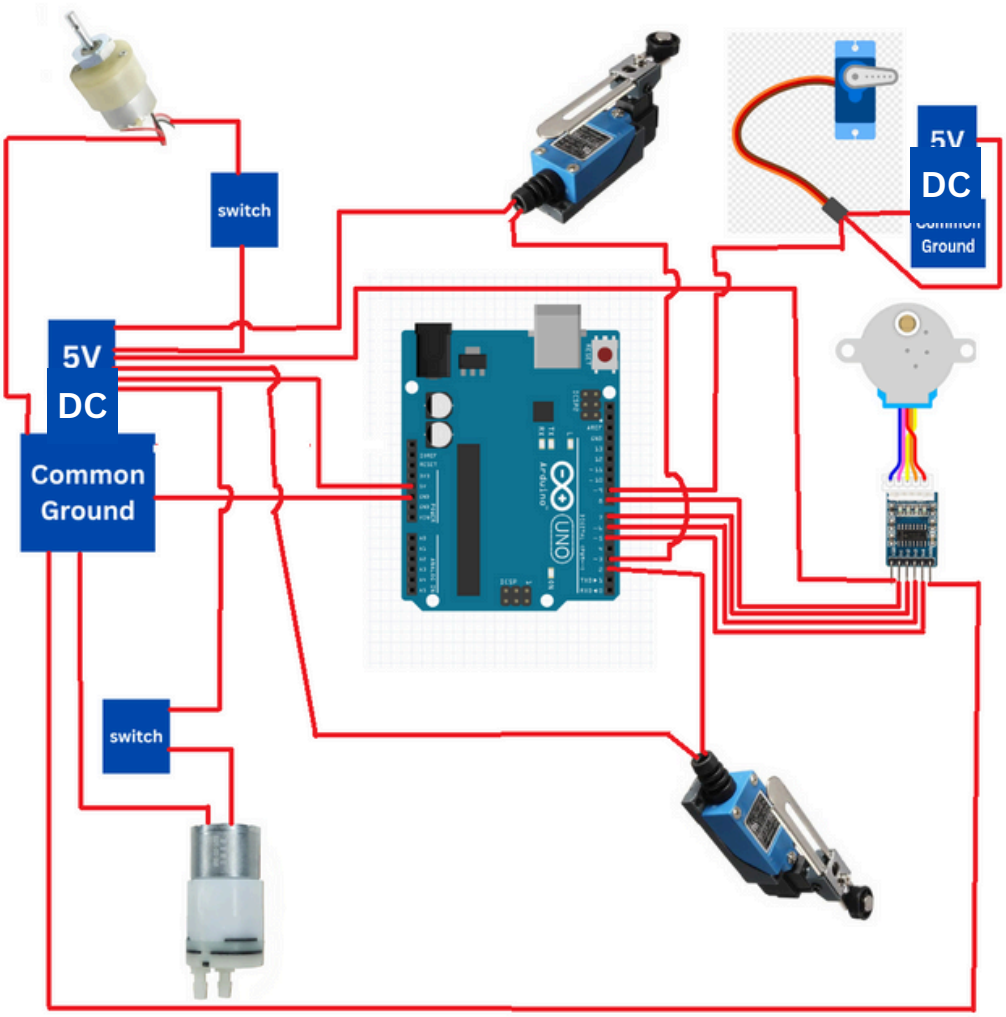

Arduino Code:

```
#include <Servo.h>
#include <Stepper.h>

#define MAIN_SWITCH_PIN 2   // Main switch for starting the process
#define SERVO_SWITCH_PIN 3   // Dedicated switch for servo
#define SERVO_PIN 9
#define STEPS_PER_REV 2048

Servo servo;
Stepper stepperMotor(STEPS_PER_REV, 8, 7, 6, 5);

// Track cumulative steps moved from the home (initial) position
long currentPositionSteps = 0;

// Debounce / edge detect for main switch
int lastMainState = LOW;
unsigned long lastDebounceTimeMain = 0;
const unsigned long debounceDelay = 50; // ms

void setup() {
 pinMode(MAIN_SWITCH_PIN, INPUT);  // if using pullups change to INPUT_PULLUP and wire accordingly
 pinMode(SERVO_SWITCH_PIN, INPUT);

 servo.attach(SERVO_PIN);
 servo.write(0);

 stepperMotor.setSpeed(10);
}

void loop() {
 // --- Servo switch (simple) ---
 if (digitalRead(SERVO_SWITCH_PIN) == HIGH) {
  servo.write(120);    // Move servo to 120°
  delay(1000);
  servo.write(0);     // Return to 0°
  delay(500);      // Small debounce / prevent retrigger
 }

 // --- Main switch with rising-edge debounce ---
 int reading = digitalRead(MAIN_SWITCH_PIN);

 if (reading != lastMainState) {
  // reset the debouncing timer
  lastDebounceTimeMain = millis();
 }

 if ((millis() - lastDebounceTimeMain) > debounceDelay) {
  // if the switch state has stabilized
  if (reading == HIGH && lastMainState == LOW) {
   // rising edge detected -> run the process
   runProcessAndReturnHome();
  }
 }

 lastMainState = reading;
}

// Runs your sequence of stepper moves and then returns to initial position
void runProcessAndReturnHome() {
 // Example sequence (same as your original delays / rotates)
 delay(10000);
 rotateStepper(120);

 delay(10000);
 rotateStepper(120);

 delay(10000);
 rotateStepper(120);
 delay(2000);

 // After finishing all required moves, return to initial position
 returnStepperToHome();
}

// Rotate stepper by given degree (clockwise). Updates currentPositionSteps.
void rotateStepper(int degree) {
 // Map degrees [0..360] to steps [0..STEPS_PER_REV]
 long steps = map(degree, 0, 360, 0, STEPS_PER_REV);
 // Perform the step
 stepperMotor.step((int)steps);
 // Record position (positive means away from home)
 currentPositionSteps += steps;
}

// Return stepper back to the starting position (home)
void returnStepperToHome() {
 if (currentPositionSteps == 0) return; // already at home

 // Step back by negative of accumulated steps
 stepperMotor.step((int)(-currentPositionSteps));

 // Reset recorded position
 currentPositionSteps = 0;
}
```

6.3 Pneumatic Setup

6.3.1 Pneumatic Circuit Modeling and Verification

The pneumatic circuit was initially designed and tested in FluidSIM to verify the correct sequencing of the cylinder and valves. The schematic includes the 5/2 directional control valves, the time-delay valve, the roller-lever limit valve, and the push-button start valve, all connected to a double-acting cylinder. Simulating the circuit allowed the timing behavior, signal flow, and switching logic to be validated before hardware assembly, ensuring that the extension–retraction sequence operates reliably and without manual adjustments.

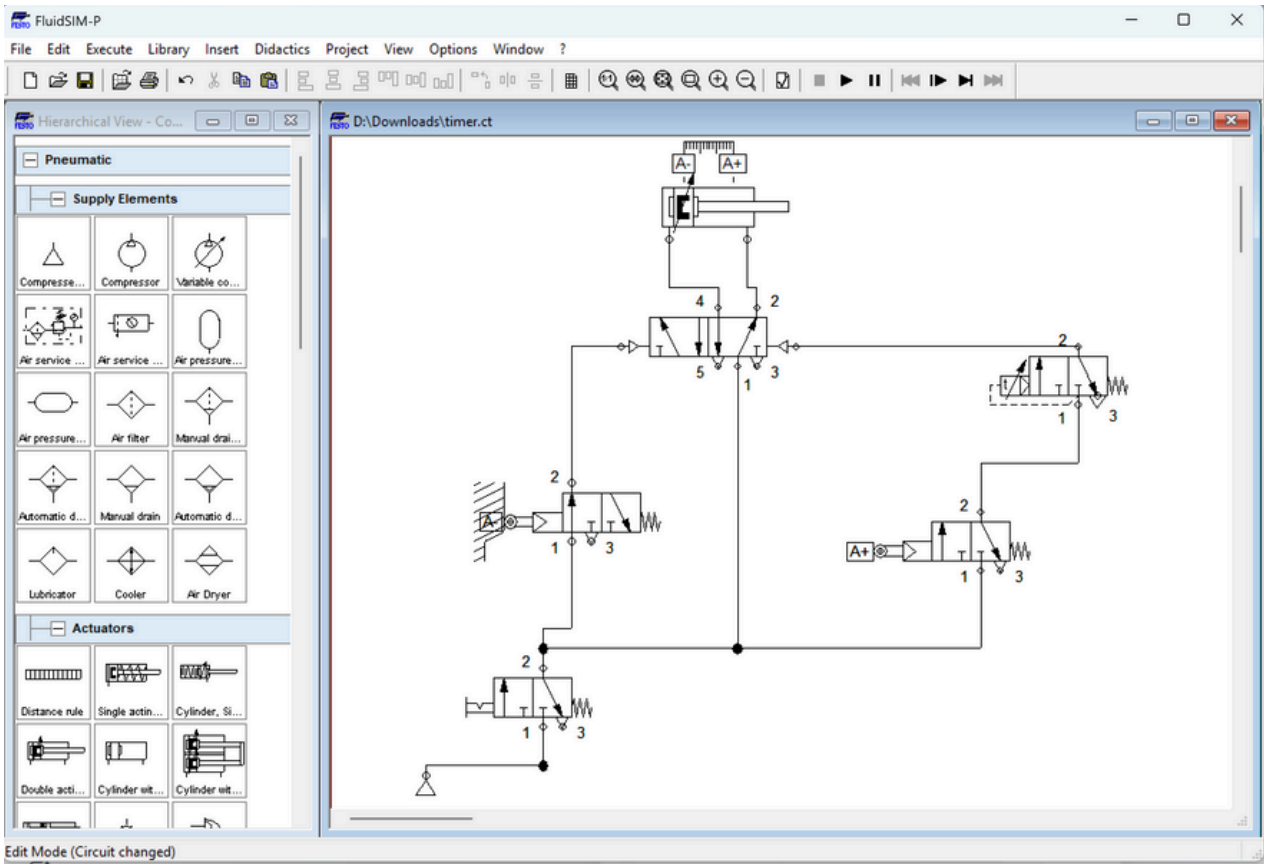

Figure 6b: Pneumatic Circuit Diagram

6.3.2 Implementation of the Pneumatic System on the Training Panel

After validation in FluidSIM, the circuit was physically assembled on the pneumatic training panel using industrial-grade components. The valves, cylinder, and flow-control units were mounted on the profile board and connected using hoses according to the simulated layout. This setup demonstrates the actual behavior of the system, including real-time valve actuation, timing response of the time-delay valve, and controlled piston motion. The hardware arrangement provides a clear comparison with the simulated model and allows hands-on observation of the complete pneumatic sequence in operation.

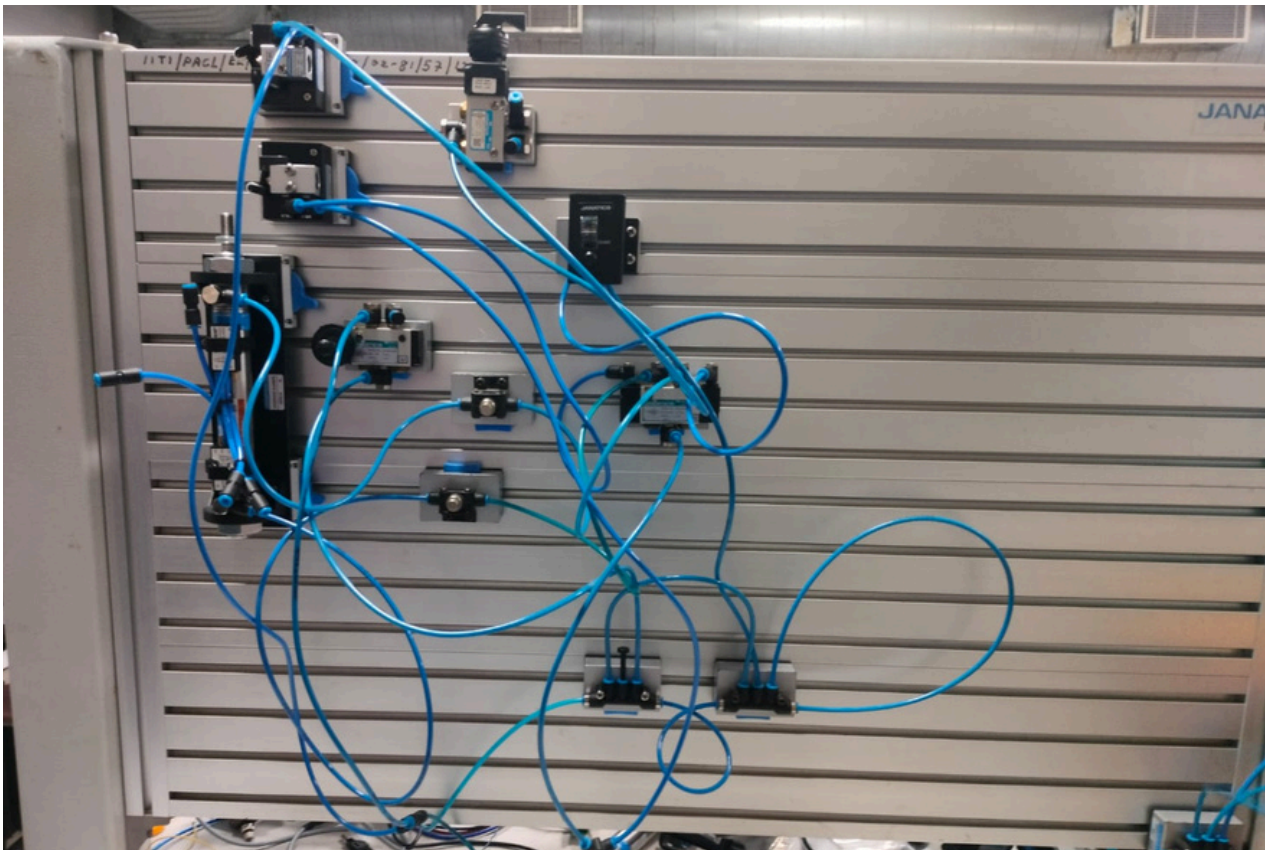

Figure 6c: Experimental Pneumatic Setup

7. Limitations & Future Work

7.1 Current Limitations

While the prototype successfully demonstrates the basic working principle of a MIG torch cleaner system, several practical limitations exist in the current design:

- **Manual Actuation**: Due to time and resource constraints, certain functions such as the pneumatic cylinder motion, air blow solenoid, and coolant pump are currently actuated manually using switches instead of being controlled electronically through the microcontroller.
- **Mechanical Pneumatics**: The Z-axis motion of the torch cleaning brush is operated through mechanical pneumatics using a timer-based control (set to 20 seconds). This lacks flexibility and fine control compared to an electronically actuated system.
- **Limited Automation**: The absence of electrically actuated solenoid valves and automated sequencing limits the system's ability to operate autonomously. Full automation would require synchronized electronic control of pneumatics, sensors, and motor drivers.
- **Motor Driver Malfunction**: The continuous operation of the brush motor was implemented as a temporary solution due to malfunctioning motor drivers. This restricts speed control and affects energy efficiency.

- **Prototype Constraints**: As a proof-of-concept prototype, the current model prioritizes demonstrating functionality over industrial-grade performance, precision, and reliability.

7.2 Planned Upgrades

Future versions of this project aim to address the above limitations by implementing:

- **Full Electrical Automation**: Integration of electrically actuated pneumatic valves and solenoids to achieve complete automation of the cleaning cycle.
- **Advanced Motor Control**: Replacement of faulty motor drivers and addition of speed control features to regulate brush motor rotation dynamically.
- **Sensor-Based Operation**: Incorporation of additional sensors (load, proximity, or optical) for precise torch detection, alignment, and safety interlocks.
- **Programmable Timing Control**: Replacing the timer-based pneumatic control with a programmable microcontroller-based timing system for adaptive motion cycles.
- **System Integration with Welding Unit**: In the long term, the cleaner can be integrated with the main MIG welding setup, enabling automatic cleaning between welding cycles without manual intervention.

- **Improved Mechanical Design**: Optimizing the frame and brush assembly for smoother operation, reduced vibration, and easier maintenance.

8. Conclusion

This project successfully demonstrates the fundamental concept and working of a **MIG Torch Cleaning System** using mechanical pneumatics and Arduino-based control. The prototype effectively automates essential cleaning tasks such as torch movement, wire cutting, and brush rotation, thereby simulating the operation of a real industrial torch cleaning station.

Despite limitations in automation and motor control, the system validates the mechanical and control architecture required for a fully functional MIG torch cleaner. With further development involving electrically actuated pneumatics, automated solenoids, and improved control algorithms, the project holds significant potential for **industrial adoption** as a **low-cost, efficient, and modular torch cleaning solution**.

The current prototype serves as a foundation for future enhancements, bridging the gap between **manual torch cleaning methods and intelligent, automated maintenance systems** used in modern welding environments.